1870912
Metal AW Day Bed
Parts List

A.	Left Side Assembly	1 pc
B.	Right Side Assembly	1 pc
C.	Front Side Rail	1 pc
D.	Back Assembly	1 pc
E.	Grid Section	1pc
F.	Long Allen Head Bolts	2 pcs
G.	Medium Allen Head Bolts	6 pcs
H.	Short Allen Head Bolts	8 pcs
I.	Big Flat Washers	8 pcs
J.	Small Flat Washers	6 pcs
K.	Plastic Caps	2 pcs
L.	Long Allen Head Wrench	1 pc
M.	Short Allen Head Wrench	1 pc

∗ Please make sure that you have all the parts indicated above before you begin assembly of this item.
∗ This item should be assembled on a soft surface to prevent scratching the finish during assembly.
∗ This item may require periodic tightening.

Hardware Illustrations

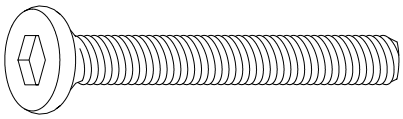

F. Long Allen Head Bolt

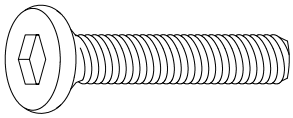

G. Medium Allen Head Bolt

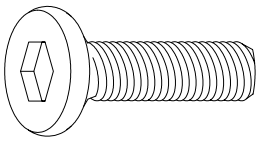

H. Short Allen Head Bolt

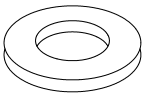

I. Big Flat Washer

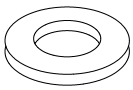

J. Small Flat Washer

1870912
Metal AW Day Bed

Attach Back Assembly and Front Rail

Parts required

A.	Left Side Assembly	1 pc	H.	Short Allen Head Bolts	8 pcs
B.	Right Side Assembly	1 pc	I.	Big Flat Washers	8 pcs
C.	Front Rail	1 pc	K.	Plastic Caps	2 pcs
D.	Back Assembly	1 pc	L.	Long Allen Head Wrench	1 pc
F.	Long Allen Head Bolts	2 pcs	M.	Short Allen Head Wrench	1 pc

Note: Do not fully tighten bolts until assembly is complete.

1. **Attach Back Assembly (A)** Place all parts on a soft surface. Insert the top ends of Back Assembly (D) into the pre-threaded holes in casting blocks of Left Side Assembly (A) and Right Side Assembly (B). Secure with Long Allen Head Bolts (F),using Short Allen Head Wrench (M). Cover the the head of Long Allen Head Bolts (F) with Plastic Caps (K). Align the pre-threaded holes in the bottom rail ends of Back Assembly (D) with the pre-threaded holes in casting blocks of Left Side Assembly (A) and Right Side Assembly (B). Secure with Short Allen Head Bolts (H), Big Flat Washers (I) using Long Allen Head Wrench (L). See Illustration #1.
2. **Attach Front Rail(C)** Align the pre-threaded holes in Front Rail (C) with casting blocks of Left Side Assembly (A) and Right Side Assembly (B). Secure with Short Allen Head Bolts (H), Big Flat Washers (I) using Long Allen Head Wrench (L). See Illustration #1.

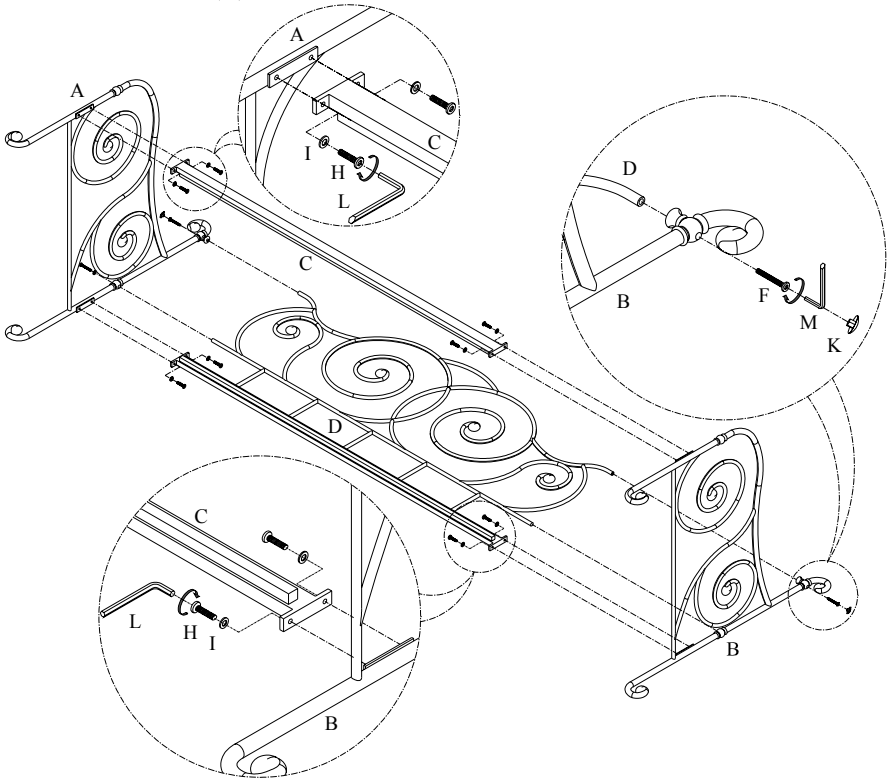

Illustration #1

1870912
Metal AW Day Bed

Attach Grid Section

Parts required

D.	Back Assembly	1 pc	J.	Small Flat Washers	6 pcs
E.	Grid Section	1pc	M.	Short Allen Head Wrench	1 pc
G.	Medium Allen Head Bolts	6 pcs			

Note: Do not fully tighten bolts until assembly is complete.

1. **Attach Grid Section (E)** Lay bed assembly on its back side. Align the pre-threaded holes in the Grid Section (E) with the pre-threaded holes in the Front Rail (C) and bottom rail of Back Assembly (D). Secure with Meduim Allen Head Bolts (G), Small Flat Washers (J) using Short Allen Head Wrench (M). See Illustration #2.
2. **Fully tighten all the bolts and turn bed upright.**

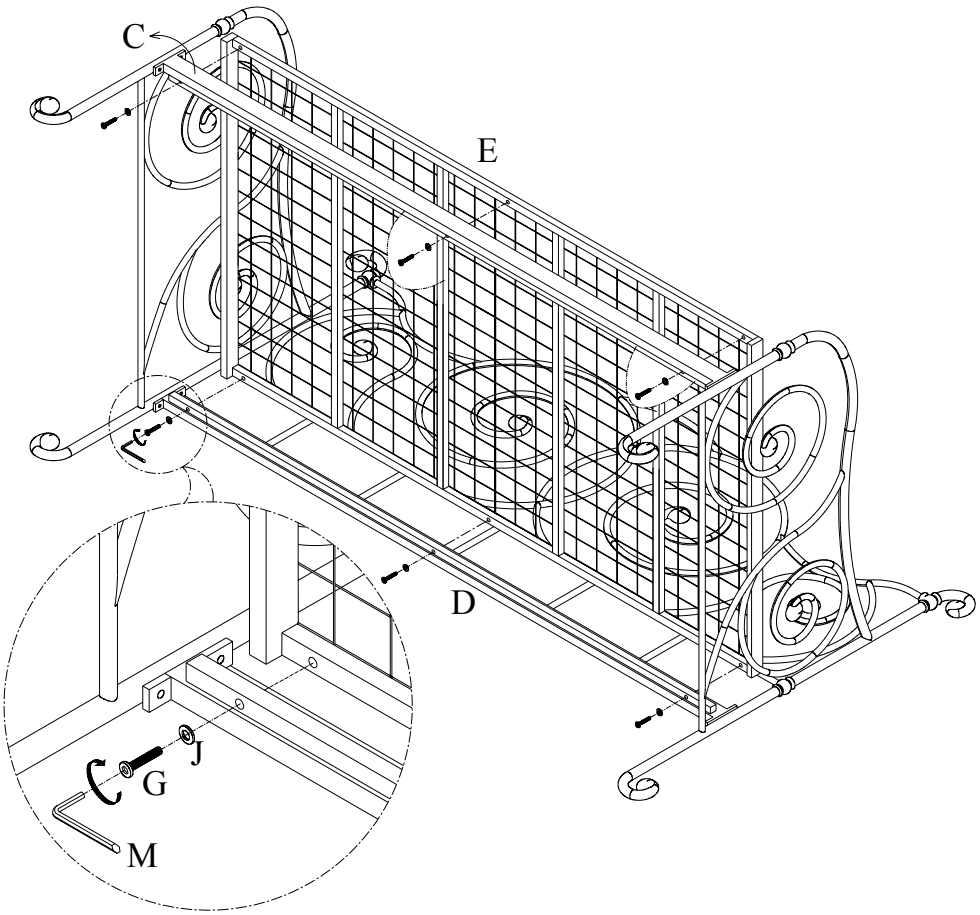

Illustration #2

R1-2-28-03